Manual Units

Handwheel Orientation Configurable

Features: Handwheel orientation is selectable. Best suited for use in limited spaces.

X-Axis

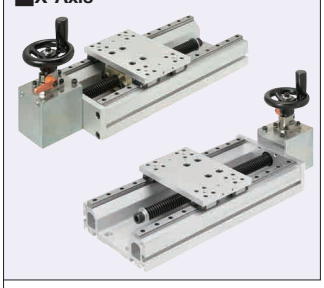

KUEF

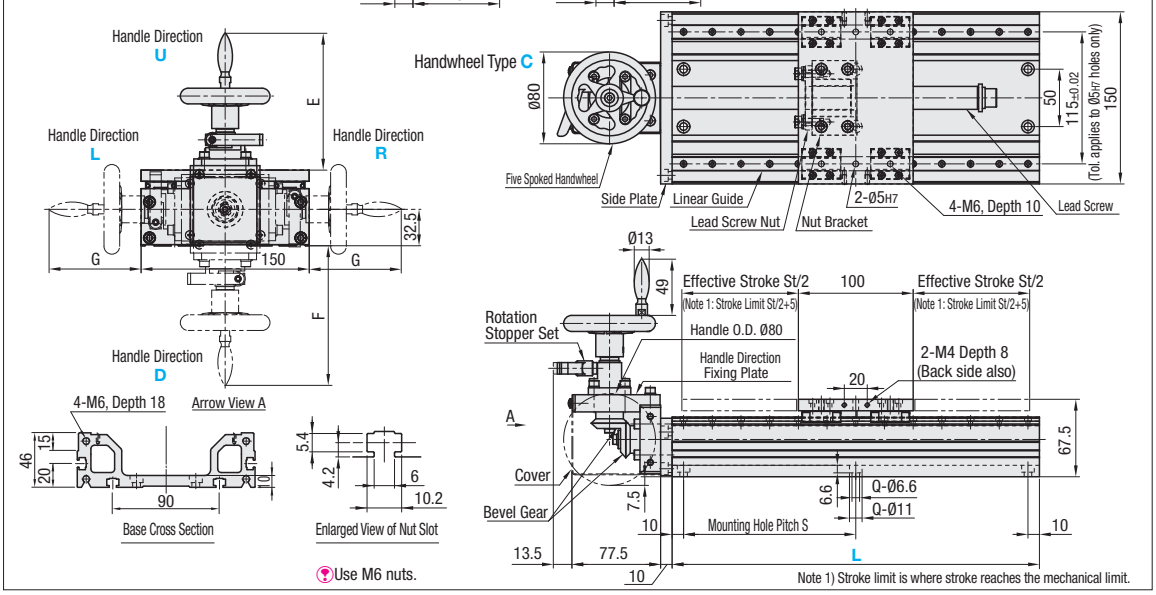

Use M6 nuts.

Note 1) Stroke limit is where stroke reaches the mechanical limit.

Components

Parts	Base	Table	Lead Screw	Lead Screw Nut
M Material	Aluminum Alloy	Aluminum Alloy	S45C	Brass
S Surface Treatment	Clear Anodize	Clear Anodize	Black Oxide	-

Parts	Nut Bracket	Side Plate	Bevel Gear	Cover
M Material	Aluminum Alloy	Aluminum Alloy	S45C	SUS304HL
S Surface Treatment	Clear Anodize	Clear Anodize	-	-

Part Number Type	Part Number No.	Handwheel Type	Handwheel Orientation Configurable	Base Length L (mm)	Effective Stroke St(mm)	Lead Screw Thread Dia.	Lead Screw Lead	Allowable Load (N) Horizontal	Allowable Load (N) Vertical	Allowable Moment (N·m) Ma	Allowable Moment (N·m) Mb	Allowable Moment (N·m) Mc	Handwheel Type A E	A F	A G	B E	B F	B G	C E	C F	C G	Base Mounting Hole S	Base Mounting Hole Q (Number of Holes)	Mass (kg) Handwheel Type A	Mass (kg) Handwheel Type B	Mass (kg) Handwheel Type C
KUEF	20	A Plastic Handle B Plastic Offset Handwheel - Folding Type C Five Spoked Handwheel	U D L R	170	53	20	4	490	98	14	14	27	107	109.5	67	122	124.5	82	122	124.5	82	150	4	4.7	4.7	5
				220	103																	200		5.2	5.2	5.5
				320	203																	150	6	6.2	6.2	6.5
				370	253																	175		6.7	6.7	7
				420	303																	200		7.2	7.2	7.5
				470	353																	150	8	7.7	7.7	7.7

The allowable load for this product is the load that can be placed on the stage table such that it can still be moved. "Horizontal" and "vertical" indicate the installation orientation.

Ordering Example

Part Number	-	Handwheel Type	-	Handwheel Orientation	-	L
KUEF20	-	A	-	L	-	320

Part Number Type	Part Number No.	Handwheel Type	Unit Price 1 ~ 2 pc(s). L=170	L=220	L=320	L=370	L=420	L=470
KUEF	20	A						
		B						
		C						

Required Torque, Required Turning Force

Part Number Type	Part Number No.	Required Torque (N·m) Horizontal	Required Torque (N·m) Vertical	Required Turning Force (N) Horizontal	Required Turning Force (N) Vertical
KUEF	20	0.059	0.420	2.261	16.164

*Torque and turning force required at max. load capacity.
*Turning force is the force that rotates the handwheel.
*Vertical values are those when elevating the table.

Moment Diagram

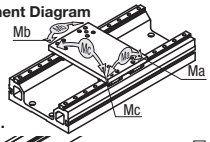

Turning Force Fig.

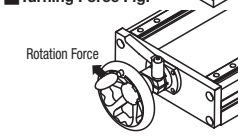

Parallelism Fig.

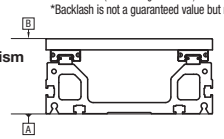

Accuracy

Type	Parallelism (mm)	Backlash (mm)
KUEF	0.15	0.5

*Parallelism is the degree of running parallelism for dimension B against dimension A. (See the diagram below.)
*Backlash is not a guaranteed value but reference value.