[High Precision] Cross Roller

Low Profile / Through Hole

Features: Extra low profile achieved by XY-Axis unitized construction in comparison to XYPG (**P.1943**). 28mm height or less and no need for orthogonal aligning.

XY-Axis, Low Profile

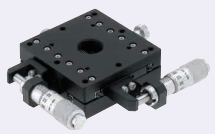

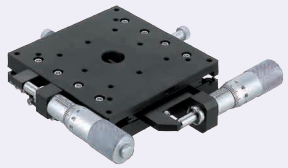

RoHS10

M Material: Aluminum Alloy

S Surface Treatment: Black Anodize

A Accessory

XYSPG	40	SCB3-10	4 pcs.
	60	SCB4-10	
	80		
	100		

XYSPG40

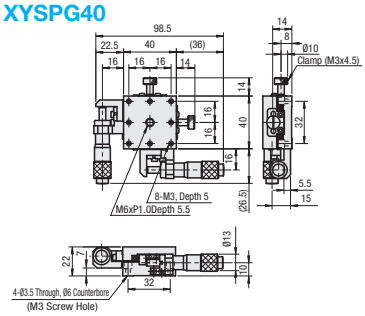

XYSPG60

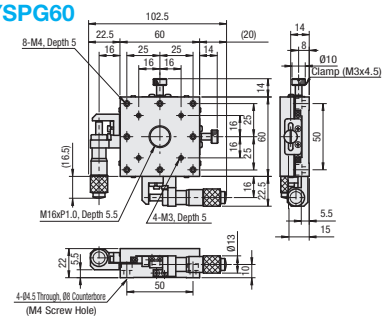

XYSPG80

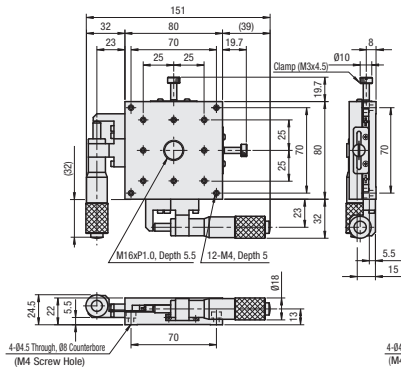

XYSPG100

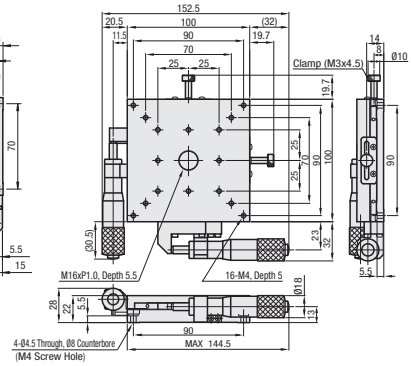

Features: There is a Ø50 through hole in the stage center. Useful for illuminating from directly below.

XY-Axis, Through Hole

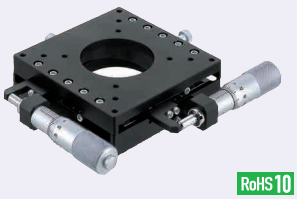

RoHS10

M Material: Aluminum Alloy

S Surface Treatment: Black Anodize

A Accessory: SCB4-14 (4 pcs.)

XYPPG100

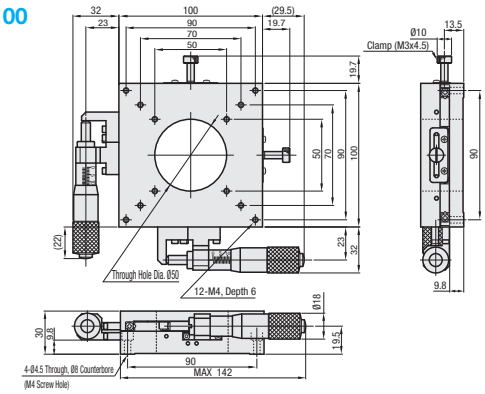

Standard Stages Similar Products (available for limited sizes only): XYCRSC (**P.1944**)

Part Number Type	No.	Stage Surface (mm)	Travel Distance (mm)	Load Capacity (N)	Travel Accuracy: Straightness	Travel Accuracy: Motion Parallelism	Travel Accuracy: Pitching	Travel Accuracy: Yawing	Moment Load Capacity (N · m): Pitching	Moment Load Capacity (N · m): Yawing	Moment Load Capacity (N · m): Rolling	Moment Rigidity (μ/N · cm): Pitching	Moment Rigidity (μ/N · cm): Yawing	Moment Rigidity (μ/N · cm): Rolling	Parallelism	Weight (kg)	Unit Price
XYSPG	40	40x40	±6.5	9.8	3μm	20μm	40"	20"	0.7	0.8	0.7	0.57	0.50	0.64	50μm	0.2	
	60	60x60		29.4					2.3	1.9	2.3	0.19	0.13	0.15		0.4	
	80	80x80	±12.5	39.2					5.1	4.2	5.1	0.13	0.13	0.11		0.7	
	100	100x100							5.1	4.2	5.1	0.08	0.10	0.08		1.1	
XYPPG	100	100x100	±12.5	63.7	3μm	20μm	25"	15"	4.6	3.9	4.6	0.07	0.08	0.10	50μm	1.0	

Micrometer Head Resolution: 10μm/division

Ordering Example: Part Number XYSPG80

Alterations: Part Number - (CR, A)
XYSPG60 - CR

Alterations	Micrometer Position	
Spec.	Side Mount - Right / Left Reversed 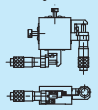 Not applicable to XYSPG100.	Center 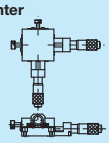
Code	CR	A

Mounting dimensions of micrometer head, feed screw and clamp are different from those of standard products. See the CAD data for details.

Knob Cover HDCVR13 (Sold Separately): Ø13 micrometer knob can be increased in diameter by installing the cover. **P.2004**

Extension Cover HDEXT13 (Sold Separately): Ø13 micrometer head knob can be extended. **P.2004**