Cutout Dimensions
MCS MINI

Cutout for 734 Series male connectors with fixing flanges	Cutout for 2734 Series female connectors with fixing flanges	Screws

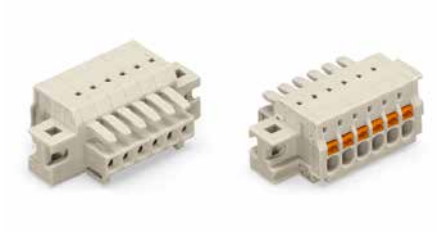

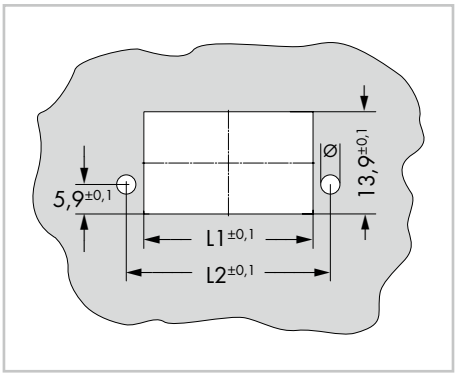

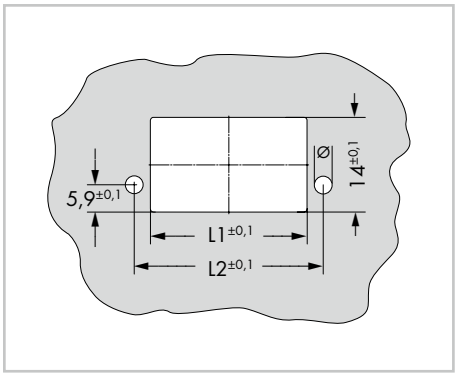

Drilled hole Ø: Depends on the type of screw used (see fixing screws).

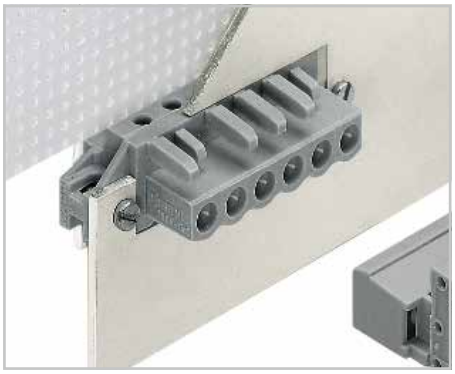

M 2.5 x 10 screws with nuts (e.g., for fixing flanges)

Table 1:

Pole No.	Pin Spacing: 3.5		Pin Spacing: 3.81	
	L1	L2	L1	L2
2	9.8	15.5	10.1	16.1
3	13.3	19.0	13.9	19.9
4	16.8	22.5	17.7	23.7
5	20.3	26.0	21.5	27.6
6	24.0	29.4	25.6	31.3
7	27.5	32.9	29.4	35.1
8	31.0	36.4	33.2	38.9
9	34.5	39.9	37.0	42.7
10	38.0	43.4	40.8	46.5
11	41.5	46.9	44.6	50.3
12	45.0	50.4	48.4	54.1
13	48.8	53.8	52.5	57.8
14	52.3	57.3	56.3	61.6
15	55.8	60.8	60.1	65.5
16	59.3	64.3	64.0	69.3
17	62.8	67.8	67.8	73.1
18	66.3	71.3	71.6	76.9
19	69.9	74.7	75.5	80.6
20	73.4	78.2	79.3	84.4
21	76.9	81.7	83.1	88.2
22	80.4	85.2	86.9	92.0
23	83.9	88.7	90.7	95.8
24	87.4	92.2	94.5	99.6

Table 2:

Pole No.	Pin Spacing: 3.5		Pin Spacing: 3.81	
	L1	L2	L1	L2
2	10.4	15.5	11.0	16.1
3	13.9	19.0	14.8	19.9
4	17.4	22.5	18.6	23.7
5	20.9	26.0	22.5	27.6
6	24.6	29.4	26.5	31.3
7	28.1	32.9	30.3	35.1
8	31.6	36.4	34.1	38.9
9	35.1	39.9	37.9	42.7
10	38.6	43.4	41.7	46.5
11	42.1	46.9	45.5	50.3
12	45.6	50.4	49.3	54.1
13	49.4	53.8	53.4	57.8
14	52.9	57.3	57.2	61.6
15	56.4	60.8	61.1	65.5
16	59.9	64.3	64.9	69.3
17	63.4	67.8	68.7	73.1
18	66.9	71.3	72.5	76.9
19	70.5	74.7	76.4	80.6
20	74.0	78.2	80.2	84.4
21	77.5	81.7	84.0	88.2
22	81.0	85.2	87.8	92.0
23	84.5	88.7	91.6	95.8
24	88.0	92.2	95.4	99.6

Dimensions	Item No.	Pack. Unit
Self-tapping screws for 1.8 mm ±0.1 mm Ø mounting hole		
B 2.2 x 9.5 mm	**209-147**	200 (2 x 100)
B 2.2 x 13 mm	**231-194**	200 (2 x 100)
Screws with nuts for 2.5 mm ±0.1 mm Ø mounting hole		
M 2 x 12 mm	**231-195**	200 (2 x 100)
Screws with nuts for 3.0 mm ±0.1 mm Ø mounting hole		
M 2.5 x 10 mm	**231-295**	200 (2 x 100)