Aluminum Roller Conveyors

The number next to the logo mark indicates items in stock for each brand.

TRUSCO

Stock 38,650 Items

Aluminum Roller Conveyor (roller diameter 38mm, thickness1.5mm)

Made to Order RoHS

.Com Drawing

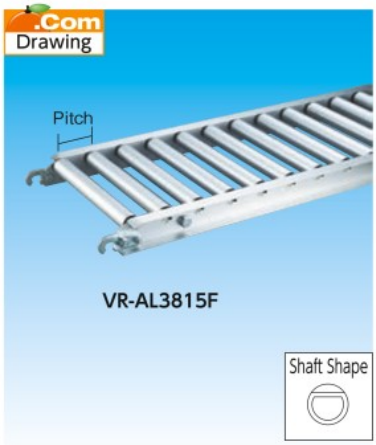

Dimensions

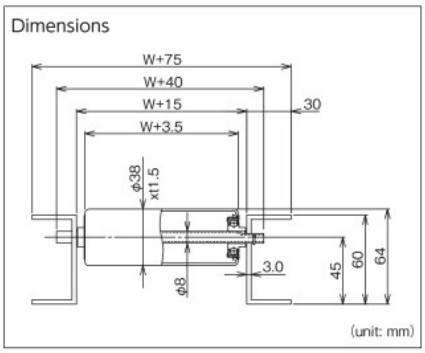

Features •Lightweight, easy to handle.
•Aluminum excellent in corrosion resistance is being used.

Materials •Frame: Aluminum
• Roller: Aluminum
•Bearings, Shafts, Bolts, Brackets: With steel plating

Origin •Japan

Item No. Example

VR-AL3815F - 300 - 75 - 2000

Model Name | Display Roller Width (mm) | Display Pitch (mm) | Conveyor Length (mm) Display

Frame End with Warps

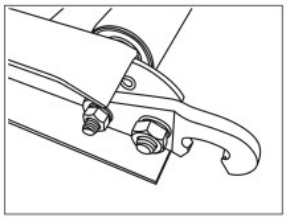

With conveyor connecting fittings

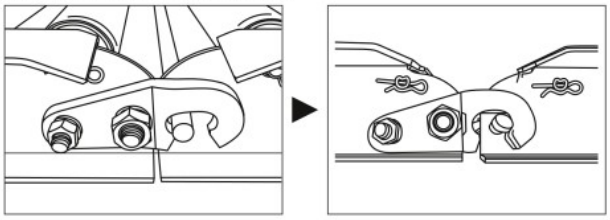

Pitch 75mm

Order Unit: 1 Piece | Factory direct | No freight charge | Excluding remote islands

TRUSCO NAKAYAMA CORPORATION

Order Code	Item No.	Price (per piece)	MSRP (per piece)	Roller Diameter (mm)	Thickness (mm)	Roller Width (W) (mm)	Pitch (mm)	Conveyor Length (mm)	Roller Load Capacity (kg/piece)	SPQ (piece)	Weight (kg)
★461-2671	VR-AL3815F-300-75-2000	¥35,362	¥38,200	38	1.5	300	75	2000	48	1	13.11
★461-2680	VR-AL3815F-300-75-3000	¥52,210	¥56,400	38	1.5	300	75	3000	48	1	19.35
★461-2710	VR-AL3815F-400-75-2000	¥39,806	¥43,000	38	1.5	400	75	2000	36	1	14.86
★461-2728	VR-AL3815F-400-75-3000	¥59,061	¥63,800	38	1.5	400	75	3000	36	1	21.98
★461-2752	VR-AL3815F-500-75-2000	¥44,249	¥47,800	38	1.5	500	75	2000	28	1	16.40
★461-2761	VR-AL3815F-500-75-3000	¥65,726	¥71,000	38	1.5	500	75	3000	28	1	24.30
★461-2795	VR-AL3815F-600-75-2000	¥48,785	¥52,700	38	1.5	600	75	2000	24	1	16.40
★461-2809	VR-AL3815F-600-75-3000	¥72,576	¥78,400	38	1.5	600	75	3000	24	1	24.30

Pitch 100mm

Order Unit: 1 Piece | Factory direct | No freight charge | Excluding remote islands

Order Code	Item No.	Price (per piece)	MSRP (per piece)	Roller Diameter (mm)	Thickness (mm)	Roller Width (W) (mm)	Pitch (mm)	Conveyor Length (mm)	Roller Load Capacity (kg/piece)	SPQ (piece)	Weight (kg)
★461-2655	VR-AL3815F-300-100-2000	¥30,641	¥33,100	38	1.5	300	100	2000	48	1	11.57
★461-2663	VR-AL3815F-300-100-3000	¥43,786	¥47,300	38	1.5	300	100	3000	48	1	16.79
★461-2698	VR-AL3815F-400-100-2000	¥34,159	¥36,900	38	1.5	400	100	2000	36	1	12.98
★461-2701	VR-AL3815F-400-100-3000	¥48,970	¥52,900	38	1.5	400	100	3000	36	1	18.84
★461-2736	VR-AL3815F-500-100-2000	¥37,214	¥40,200	38	1.5	500	100	2000	28	1	14.22
★461-2744	VR-AL3815F-500-100-3000	¥54,062	¥58,400	38	1.5	500	100	3000	28	1	20.66
★461-2779	VR-AL3815F-600-100-2000	¥40,731	¥44,000	38	1.5	600	100	2000	24	1	14.22
★461-2787	VR-AL3815F-600-100-3000	¥59,246	¥64,000	38	1.5	600	100	3000	24	1	20.66

Contact us:0120-509-849 http://www.orange-book.com/

TRUSCO

Stock 38,650 Items

Stand for Aluminium Roller Conveyor

Made to Order RoHS

.Com Drawing

Specs •Compatible models:
VR-AL3815F model,
VR-AL4515F model

Materials •Steel

Origin •Japan

Example

Dimensions

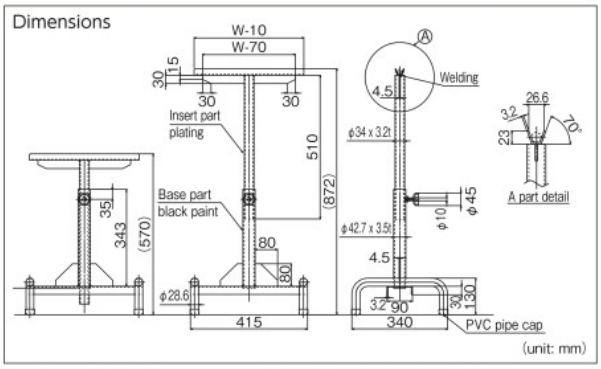

Order Unit: 1 Piece | Factory direct | No freight charge | Excluding remote islands

TRUSCO NAKAYAMA CORPORATION

Order Code	Item No.	Price (per piece)	MSRP (per piece)	Applicable Roller Width (mm)	Work Surface Height (mm)	SPQ (piece)	Weight (kg)
★461-2973	VR-K-AL-300	¥8,910	¥11,000	300	630 to 930	1	5.8
★431-9991	VR-K-AL-400	¥8,910	¥11,000	400	630 to 930	1	6.0
★461-2981	VR-K-AL-500	¥8,910	¥11,000	500	630 to 930	1	6.2
★461-2990	VR-K-AL-600	¥8,910	¥11,000	600	630 to 930	1	6.4

Contact us:0120-509-849 http://www.orange-book.com/

Order Code Yellow ···Instant delivery (Japan only) Blue ···Back order (Carriage excluded)
Item No. Pink ···Stock in Indonesia / Thailand